hales®
Suppliers to the Tooling & Plastic Industry

MOULD ACTIONS

CUMSA
INNOVATIVE SOLUTIONS FOR YOUR MOLDS

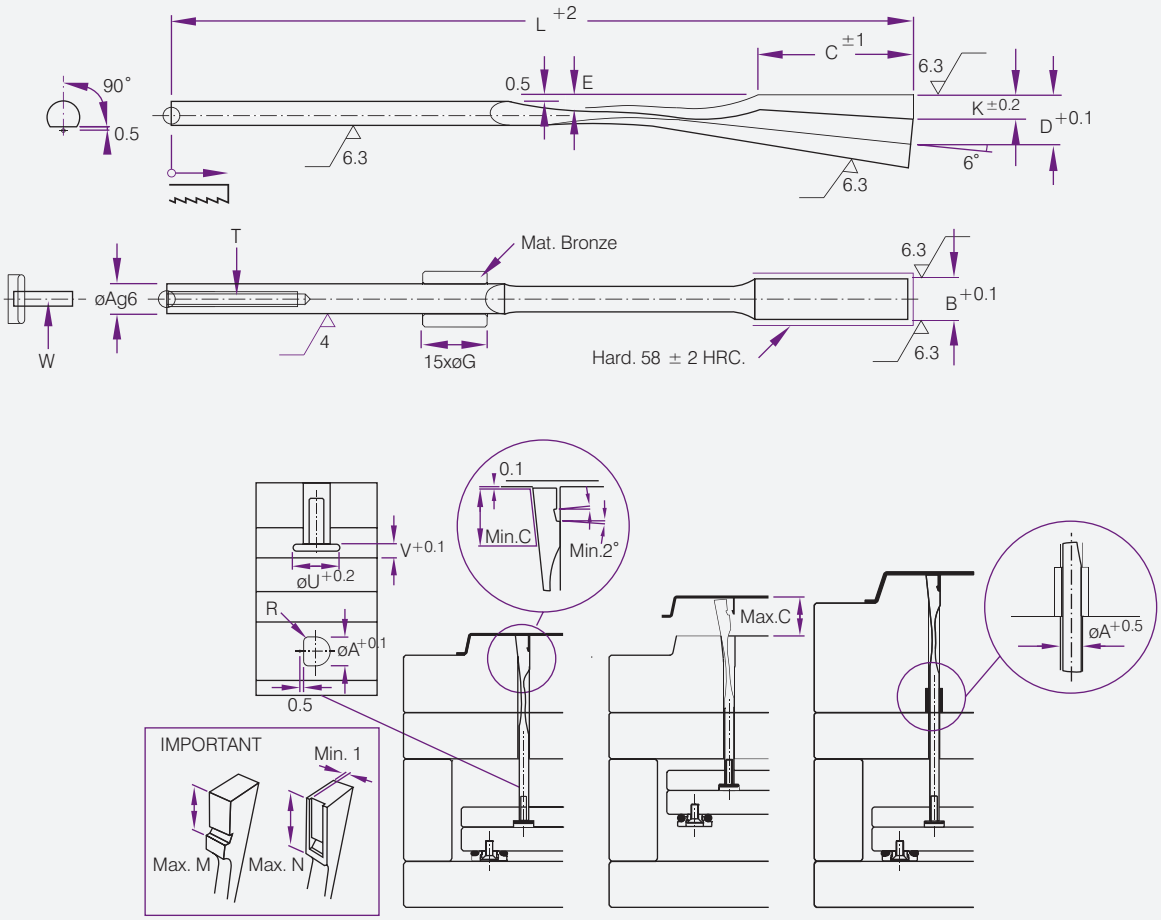

Mat.: 1.8159
Hardened 45 ± 3HRC
Patented System

Minimum space required for installation, only needs the space of an ejector. No milling, grinding or hardening other than the machining of detail needed. All machining is made 90° to the parting line. No need for complex mechanical systems.

Product Code	A	B	C	D	E	G	K	L	M	N	R	T	U	V	W	CS
PW.060622	6	6.2	22	9	3.5		3.5	125	16	18	1.25	M4x36	12	5	M4x16 (DIN7991)	
PW.060630	6	6.2	30	10	3.5	12	4.5	175	20	26	1.25	M4x36	12	5	M4x16 (DIN7991)	•
PW.060822	6	8.2	22	9	3.5		3.5	125	16	18	1.25	M4x36	12	5	M4x16 (DIN7991)	
PW.060830	6	8.2	30	10	3.5	12	4.5	175	20	26	1.25	M4x36	12	5	M4x16 (DIN7991)	•
PW.080825	8	8.2	25	11.5	4.5		4.5	140	18	21	2	M5x36	14	6	M5x16 (DIN7984)	
PW.081025	8	10.2	25	11.5	4.5		4.5	140	18	21	2	M5x36	14	6	M5x16 (DIN7984)	
PW.081030	8	10.2	30	11.2	4.5	12	4.5	175	20	26	2	M5x36	14	6	M5x16 (DIN7984)	•
PW.081225	8	12.2	25	11.5	4.5		4.5	140	18	21	2	M5x36	14	6	M5x16 (DIN7984)	
PW.081230	8	12.2	30	11.2	4.5	12	4.5	175	20	26	2	M5x36	14	6	M5x16 (DIN7984)	•
PW.101430	10	14.2	30	13.6	5.5	16	5.5	175	20	26	2.5	M6x36	18	8	M6x16 (DIN7984)	•
PW.101630	10	16.2	30	13.6	5.5	16	5.5	175	20	26	2.5	M6x36	18	8	M6x16 (DIN7984)	•
PW.101830	10	18.2	30	13.6	5.5	16	5.5	175	20	26	2.5	M6x36	18	8	M6x16 (DIN7984)	•

CUMSA
INNOVATIVE SOLUTIONS FOR YOUR MOLDS

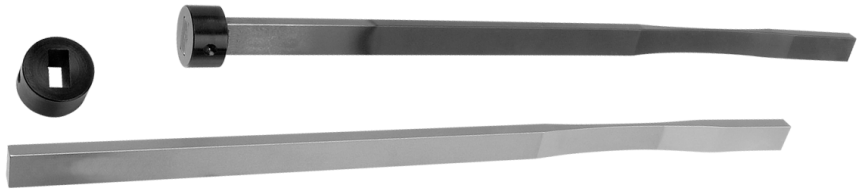

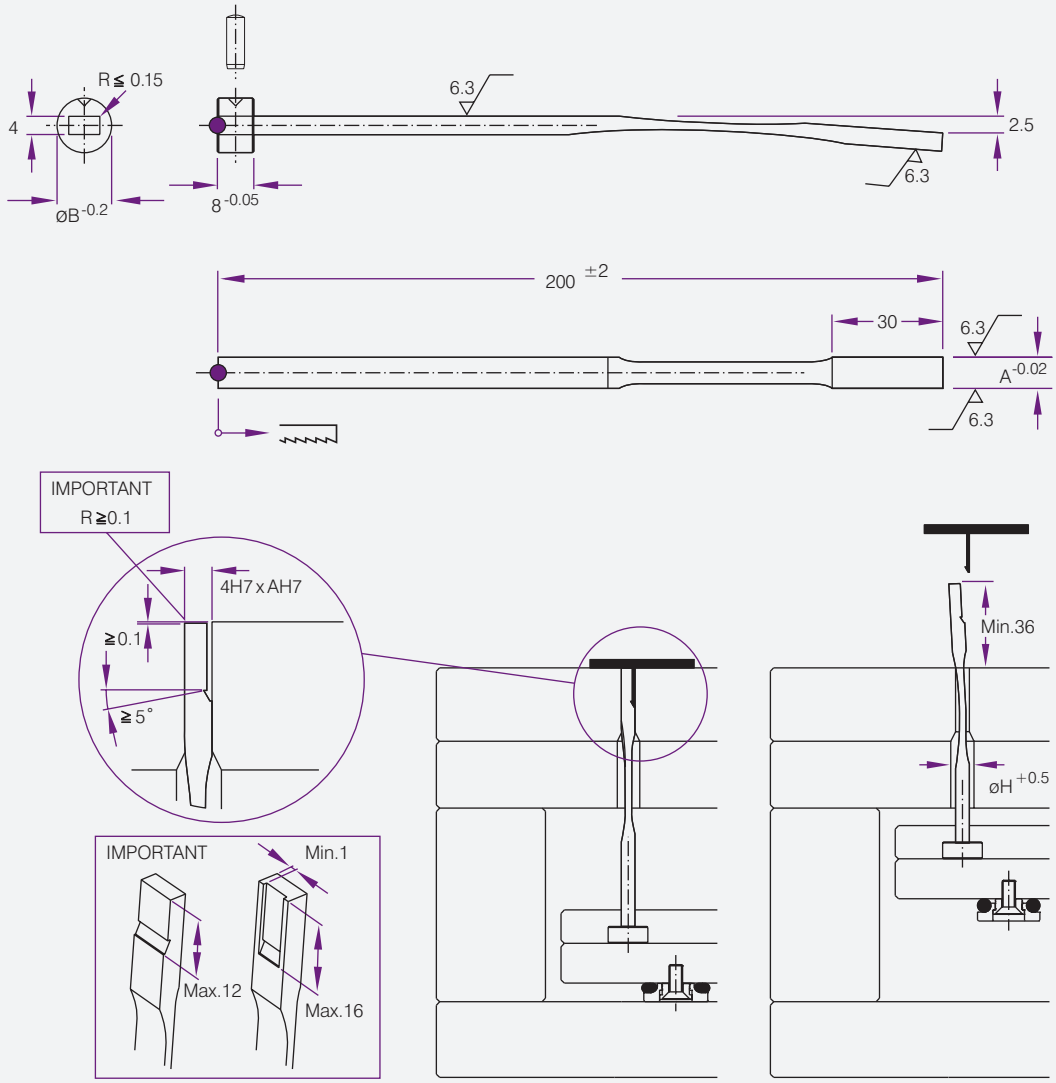

Mat.: 1.2101
Hardened 45 ± 3HRC
Patented System

Minimum space required for installation, only needs the space of an ejector. No milling, grinding or hardening other than the machining of detail needed. All drilling is 90° to the parting line. Available with and without Balinit C® coating.

Product Code	A	B	H	Balinit C®	Hardness
PF.064200	6	12	7	◆	52 ± 2 HRC.
PF.0642WB	6	12	7	-	58 ± 2 HRC.
PF.084200	8	14	9	◆	52 ± 2 HRC.
PF.0842WB	8	14	9	-	58 ± 2 HRC.
PF.104200	10	16	11	◆	52 ± 2 HRC.
PF.1042WB	10	16	11	-	58 ± 2 HRC.
PF.124200	12	18	13	◆	52 ± 2 HRC.
PF.1242WB	12	18	13	-	58 ± 2 HRC.

CUMSA
INNOVATIVE SOLUTIONS FOR YOUR MOLDS

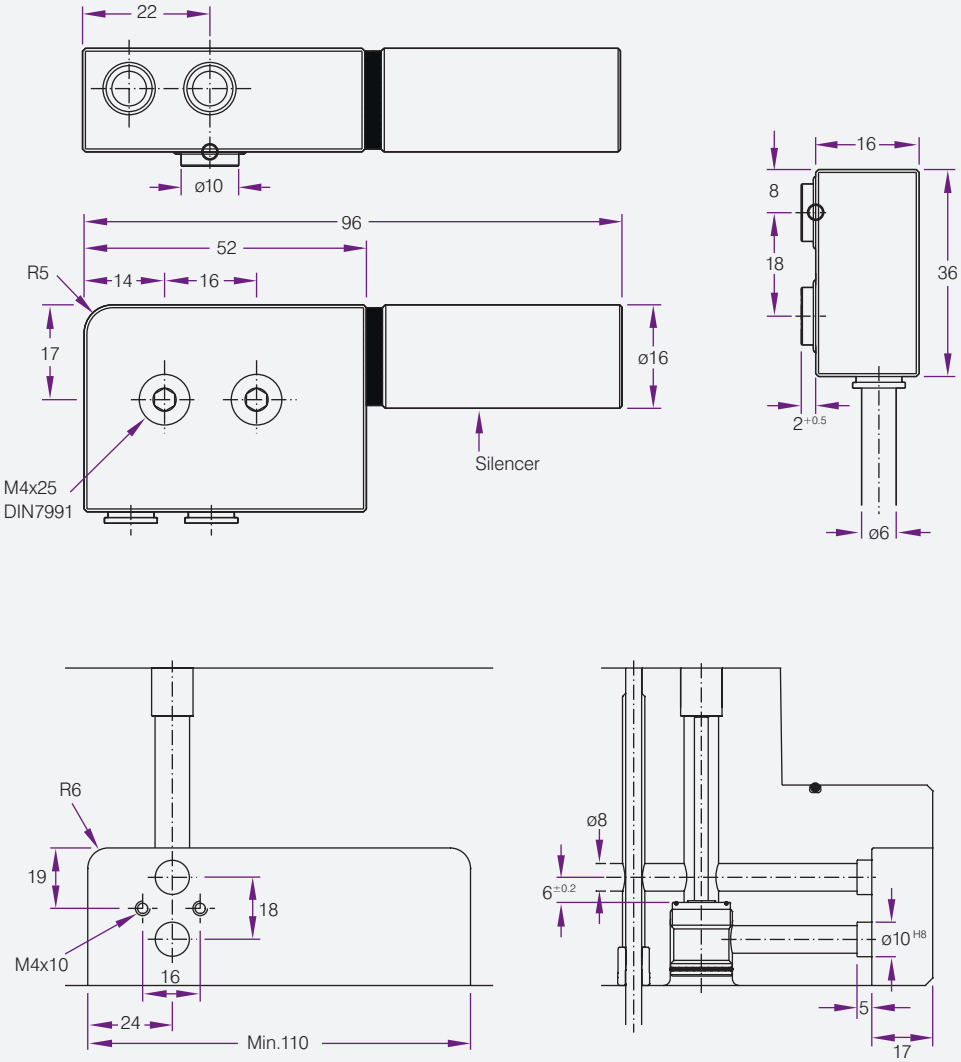

Material: Aluminium
Maximum working temperature: 80°C
Patented System

Product Code	A	B	C	D	E	H
VJ.600000	Vacuumjet 60L	5-6 Bar	-900 mbar	75nl./Min.	60nl./Min.	W.161416

CUMSA
INNOVATIVE SOLUTIONS FOR YOUR MOLDS

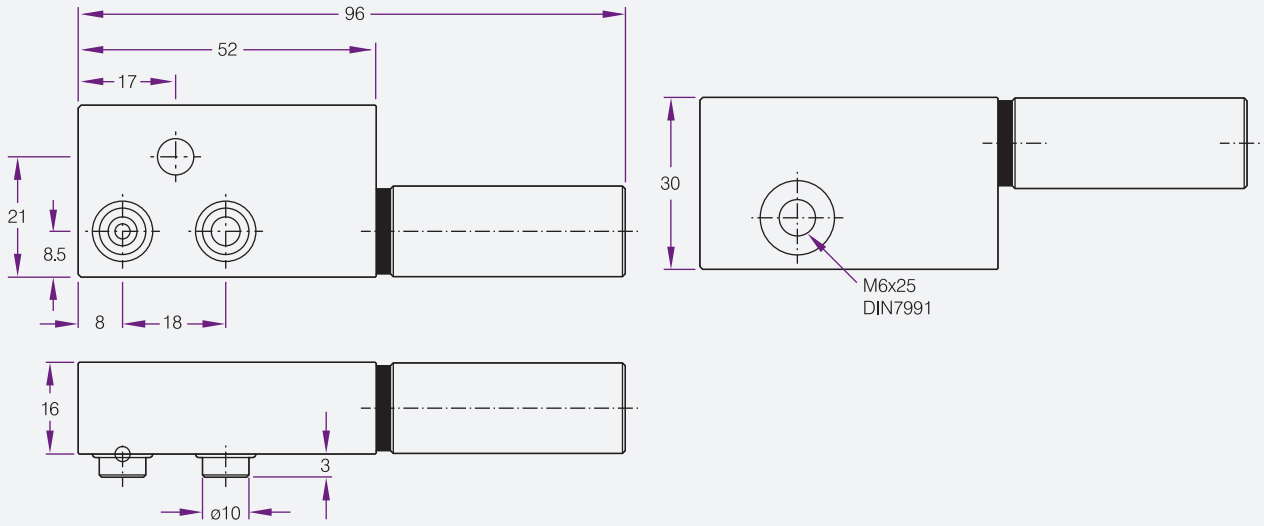

Several units can be connected together in the same vacuum circuit.

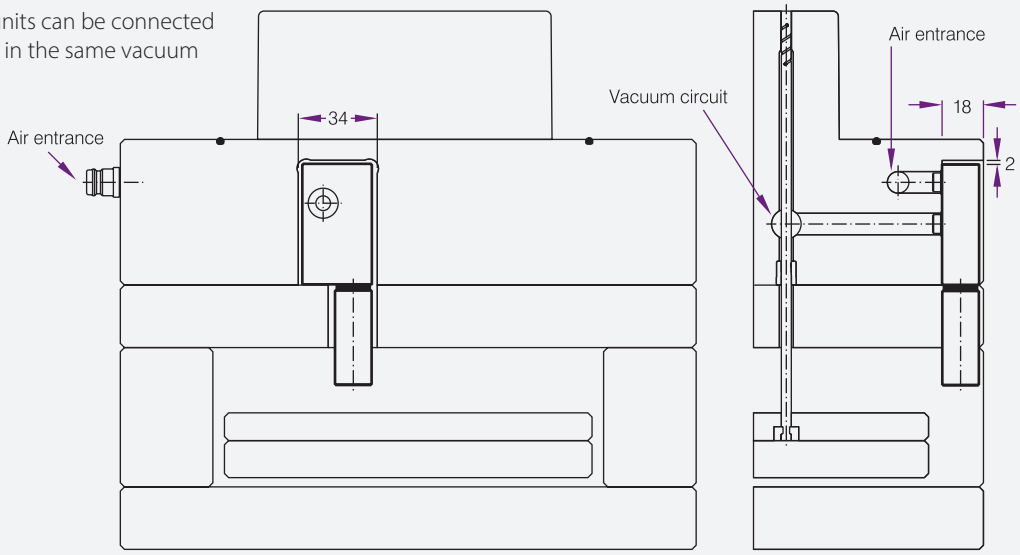

Material: Aluminium
Maximum working temperature: 80°C
Patented System

Product Code	Type
VG523016	60L

Vacuumjet Valves

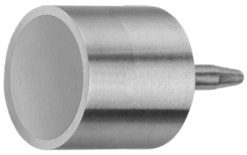

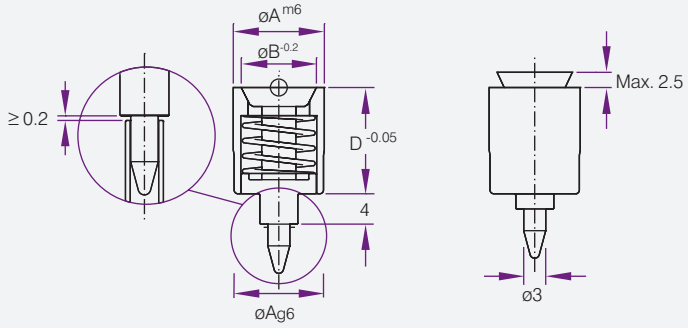

Product Code	A	B	C	D
VV.086414	8	6.7	7.5	14
VV.121014	12	9.8	10	14
VV.161416	16	14	10	16

Vacuumjet Valve Tubes

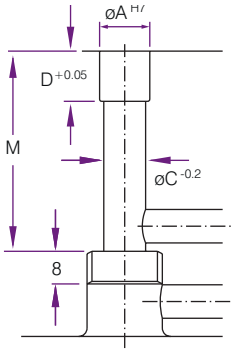

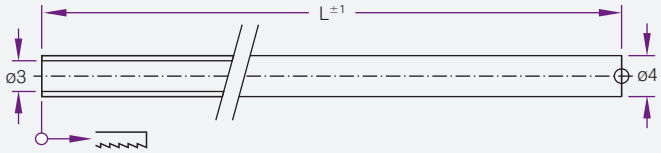

Product Code	L	M
VT.043134	134	150
VT.043209	209	225
VT.043284	284	300

Vacuumjet Valve Seals

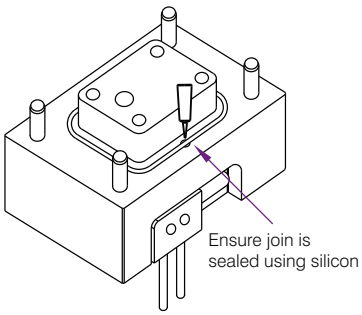

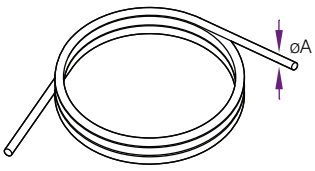

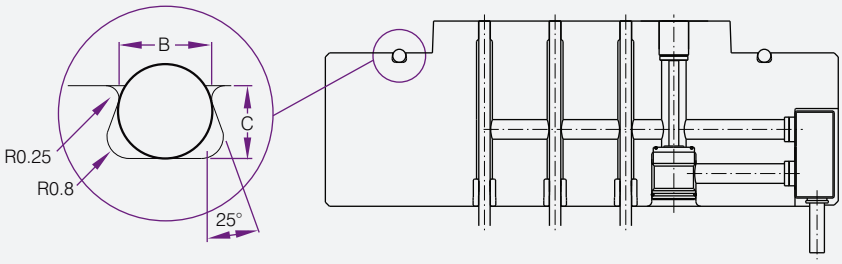

Product Code	A	B	C	mm
JV.030200	3	2.7	2.7	2.000
JV.050200	5	4.6	4.2	2.000

CUMSA
INNOVATIVE SOLUTIONS FOR YOUR MOLDS

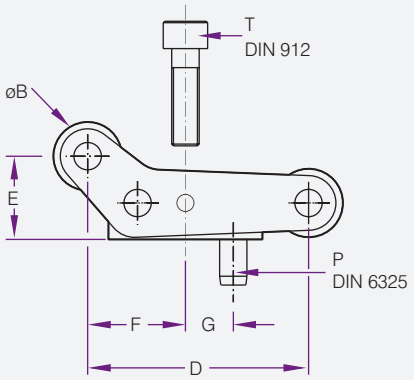

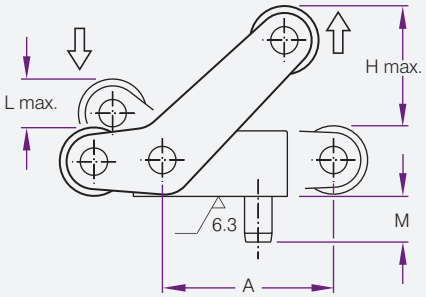

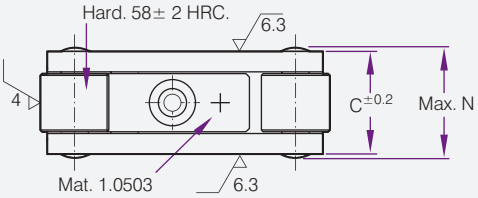

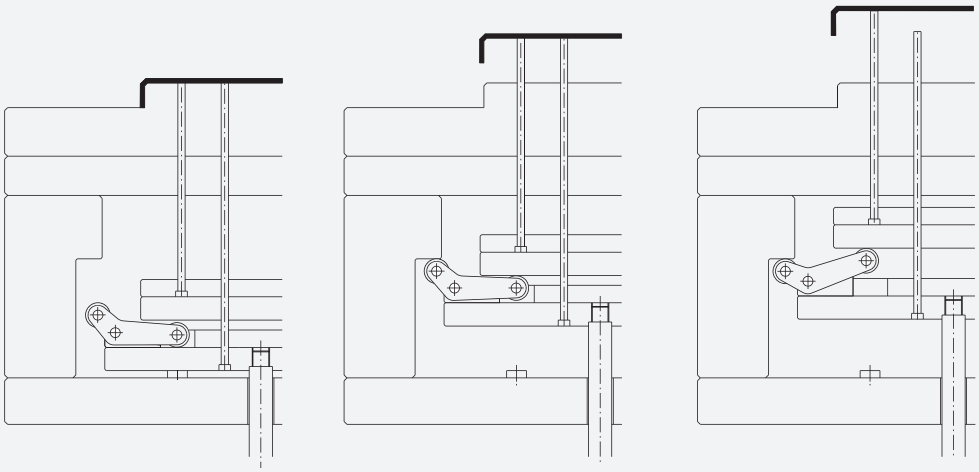

Simple mechanical double ejection system. Minimum space required for installation. Avoids complex systems like others currently available in the market. Offers a standard solution to the moulder.

Product Code	B	C	D	E	F	G	H max.	L max.	M	N	P	T	Max.	Force
EP.200813	20	8	13.2	25.8	9.4	11.4	6	13.6	5.5	5	15	Ø2.5x10	M3x12	75kg
EP.251016	25	10	16	32.3	11.8	14.3	7	17	6.8	6	18.5	Ø3x12	M4x16	125Kg
EP.371522	37.5	15	22	48.5	17.7	21.5	10.5	25.5	10.2	8	25	Ø4x16	M6x25	250Kg
EP.502030	50	20	30	64.6	23.6	28.6	14	34	13.6	10	34	Ø5x20	M8x30	500Kg

CUMSA
INNOVATIVE SOLUTIONS FOR YOUR MOLDS

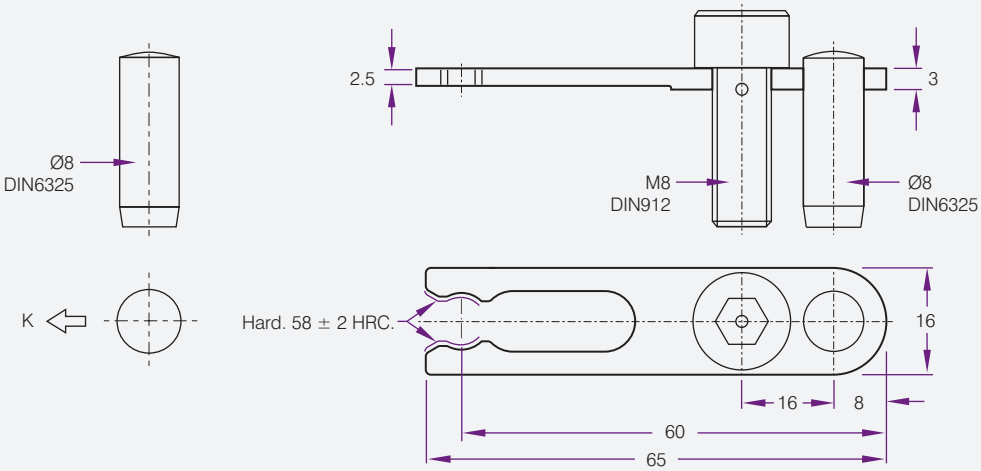

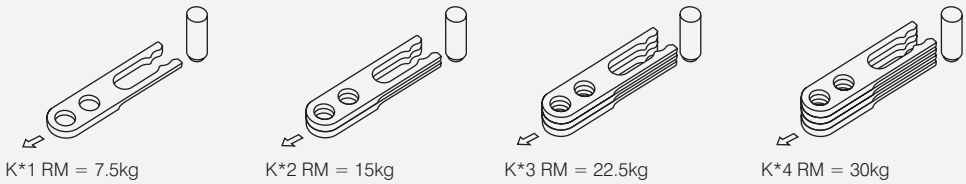

IMPORTANT
K = Approximate resistance value that can be obtained by grouping clips

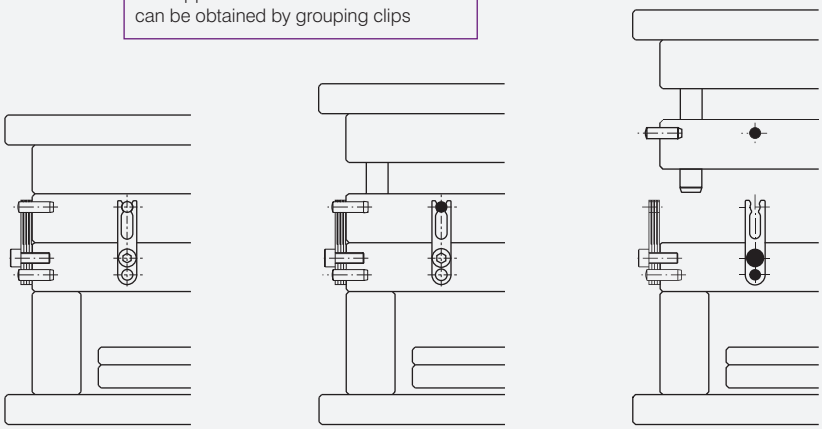

Closed Mould | 1st Opening | 2nd Opening

Mat.: 1.8159
Hardened 45 ± 3HRC
Patented System

No pocket machining required as needed with other similar products on the market. Minimum space required for installation. Reduces costs compared to conventional mechanisms. Offers a standard solution to the moulder.

Product Code	K
RM.651608	7.5kg

Slide Retainer

CUMSA
INNOVATIVE SOLUTIONS FOR YOUR MOLDS

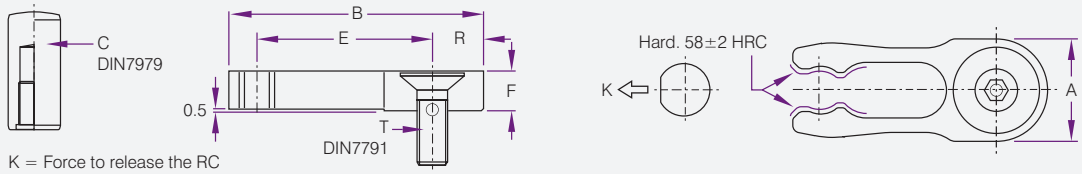

Slide Retainers
Mat.: 1.8159
Hardened 45 ± 3HRC
Patented System

Less machining for installation compared to similar products on the market. Minimum space required for installation. Reduces costs in tool downtime.
Offers a standard solution to the moulder.

Product Code	A	B	C	E	F	G	H	K	R	T
RC.123006	12	30	6x20	21	5	4	16	5 Kg	6	M5x16
RC.164008	16	40	8x20	28	6	5	15	7 Kg	8	M6x25
RC.205010	20	50	10x24	34	8	6	17	14 Kg	10	M8x30
RC.246012	24	60	12x32	42	10	7	23	21 Kg	12	M10x40
RC.328012	32	80	16x40	56	12	9	27	28 Kg	16	M12x50
RC.328016	32	80	16x40	56	16	9	25	38 Kg	16	M12x50

MOULD ACTIONS

Slide Holding Devices - Z5129

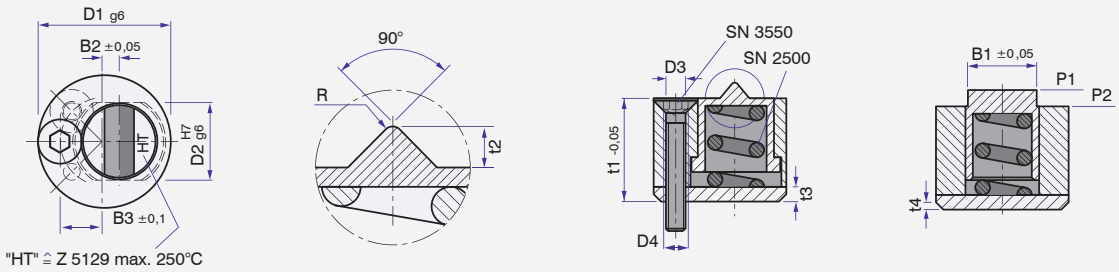

Mat. -Nr. 1.2842/58 + 2HRC
Order: Z5129 - D1

D1	B1	B2	B3	t1	t2	t3	t4	D2	D3	D4	R	P1(N)	P2(N)	SN 2500	SN3550
13	6,6	1,4	4,3	10	1,0	1,6	0,35	7	2,2	M3	0,35	28	34	5-12	M2-16
18	9,6	2,0	6,0	14	1,8	2,0	0,50	10	3,2	M4	0,5	38	42	8-16,5	M3-20
27	14,4	3,0	9,0	21	2,8	3,0	0,50	15	4,3	M5	0,75	38	92	11,6-18,5	M4-25

STRACK® NORMALIEN

Max. 100 C

Type	
0	
1	
2	

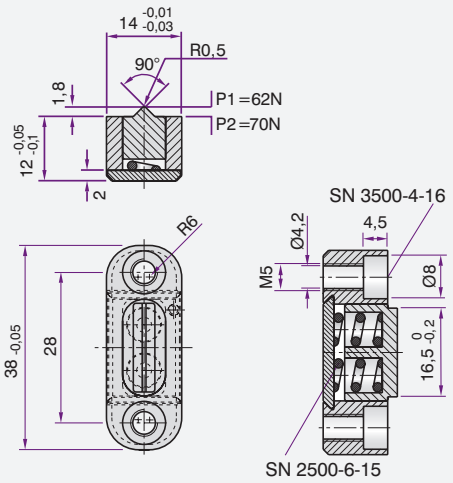

Max. 100 C

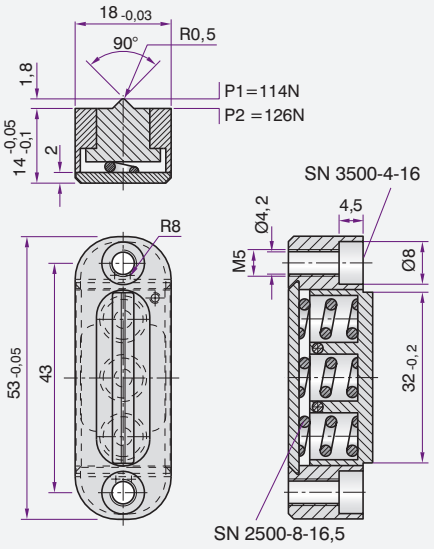

Max. 100 C

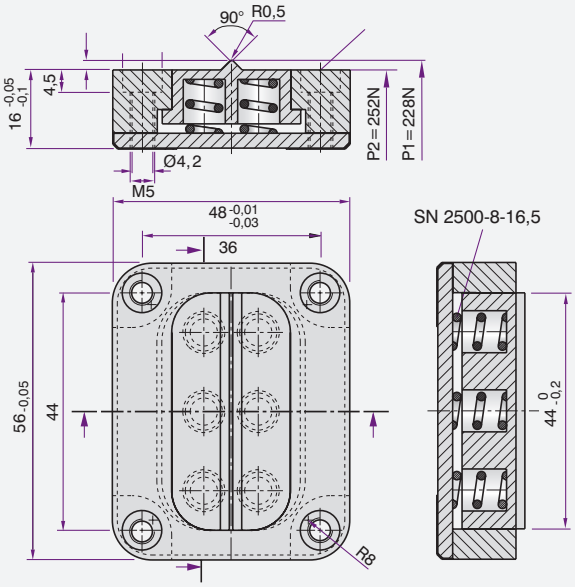

Slide Holding Devices - Z5130

STRACK® NORMALIEN

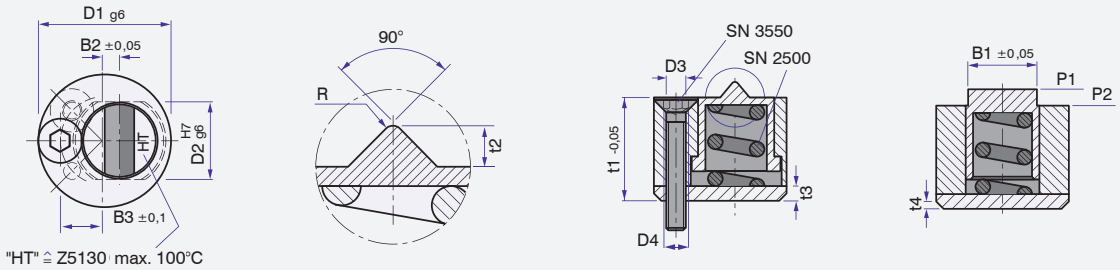

Mat. -Nr. 1.2842/58 + 2HRC
Order: Z5130 - D1

D1	B1	B2	B3	t1	t2	t3	t4	D2	D3	D4	R	P1(N)	P2(N)	SN 2500	SN3550
13	6,6	1,4	4,3	10	1,0	1,6	0,35	7	2,2	M3	0,35	28	34	5-12	M2-16
18	9,6	2,0	6,0	14	1,8	2,0	0,50	10	3,2	M4	0,5	38	42	8-16,5	M3-20
27	14,4	3,0	9,0	21	2,8	3,0	0,50	15	4,3	M5	0,75	38	92	11,6-18,5	M4-25

Slide Holding Devices - Z5134

STRACK® NORMALIEN

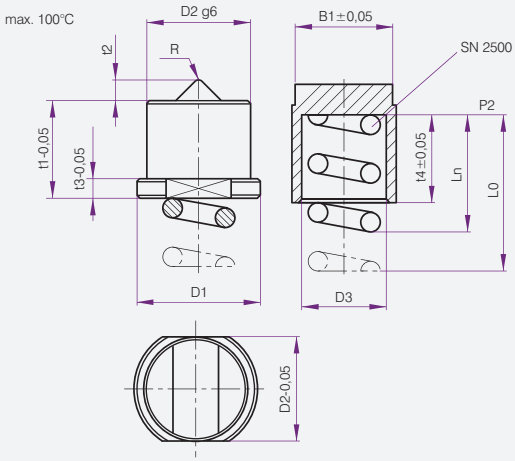

Mat. -Nr 1.2842/58 ± 2HRC
Order: Z5134 - D1

D2	B1	t1	t2	t3	t4	D1	D3	R	L0	Ln	P2(N)	SN2500-
7	6,6	7	1,0	1,4	6,3	8,4	5,3	0,35	12	7,5	34	5-12
10	9,6	10	1,8	2,0	9,0	12,0	8,3	0,50	16	10,0	42	8-16,5
15	14,4	15	2,8	3,0	13,5	18,0	12,4	0,75	18	16,0	92	11,6-18,5

STRACK® NORMALIEN

1:

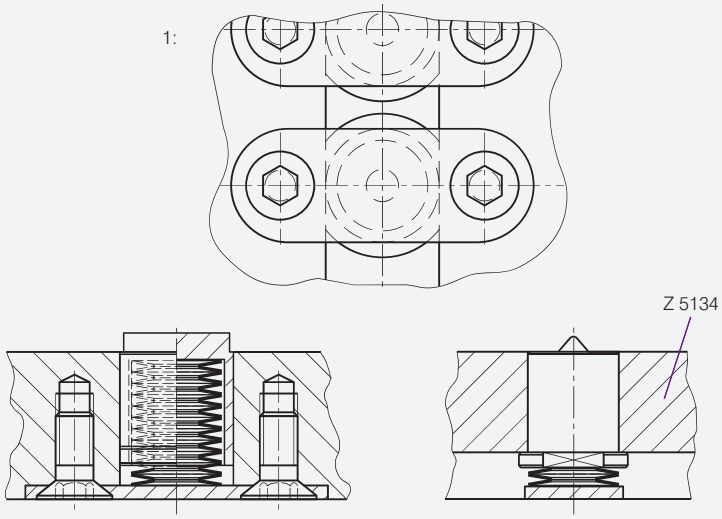

2:

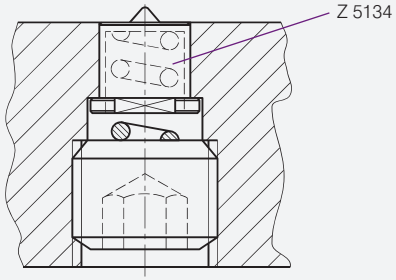

3:

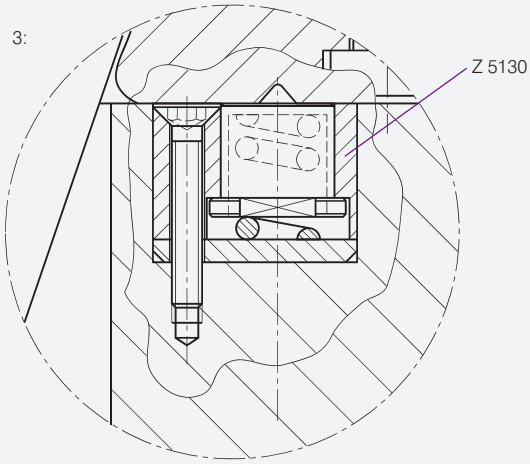

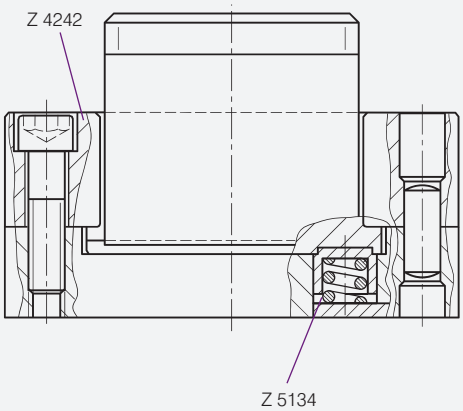

STRACK® NORMALIEN

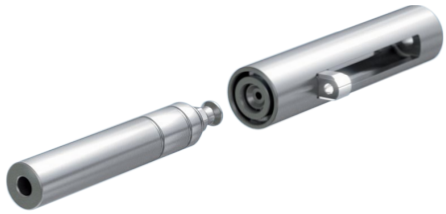

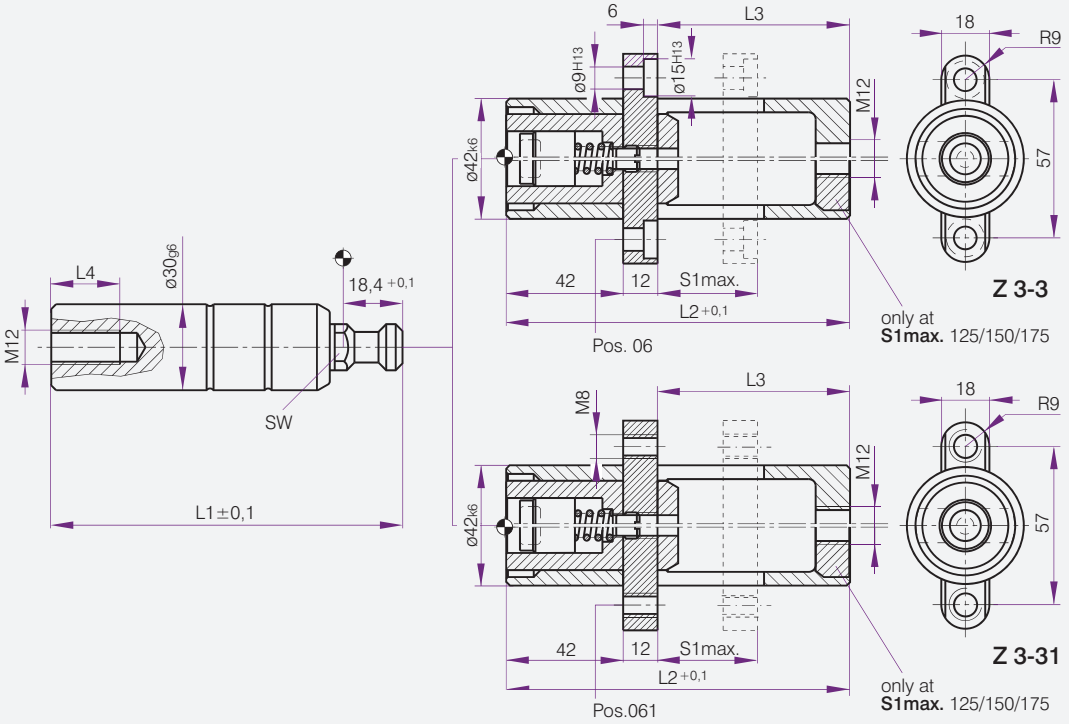

Z3 - 3 -
Z3 - 31 -

S1 max.	L1	L2	L3	L4
50	125	130	76	50
	175			
	225			
75	175	155	101	
	225			
100	175	180	126	
	225			

S1 max.	L1	L2	L3	L4
125	275	205	151	50
	325			
150	275	230	176	
	325			
175	275	255	201	
	325			

Guide Bush

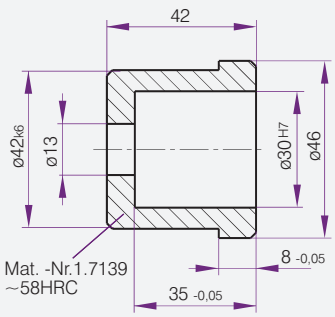

Counter Bearing

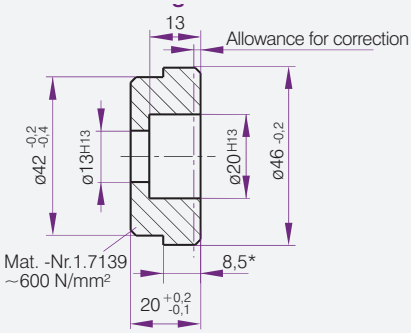

Distance Washers

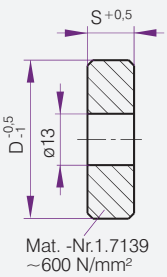

Z3 - 3 -

Pos.	
09	

Z3 - 3 -

Pos.	
10	

Z3 - 3 -

Pos.	S	D	
11	5	30	
	10		

Pos.	S	D	
12	5	42	
	10		

STRACK® NORMALIEN

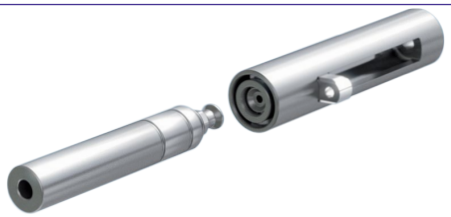

Installation independent of guide system

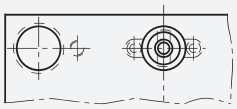

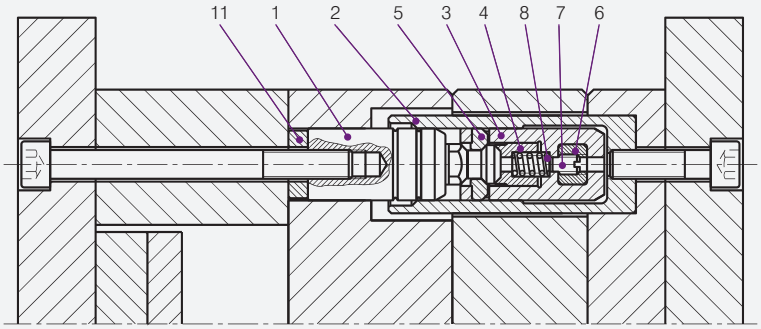

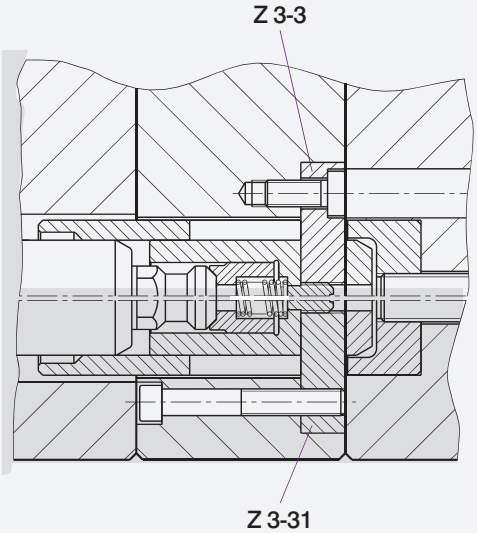

Installation in the guide system bores

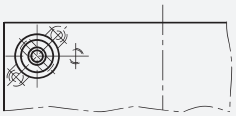

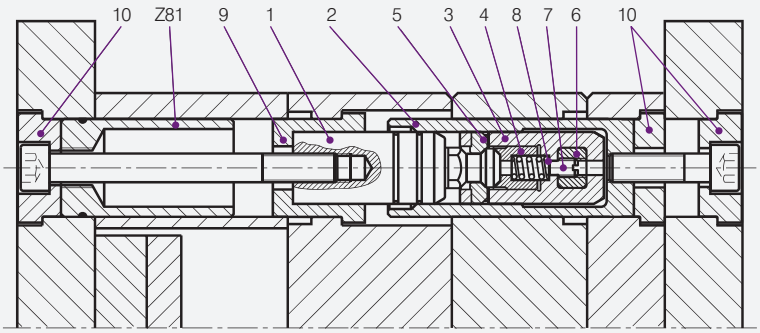

Z3 -

Type	Item	L1	L2	Description	Quant.	Mat.-No	Hardness
3	01	125	-	Latch Bar	1	1.5920	58 HRC
31	01	175	-	Latch Bar	1	1.5920	58 HRC
	01	225	-	Latch Bar	1	1.5920	58 HRC
	01	275	-	Latch Bar	1	1.5920	58 HRC
	01	325	-	Latch Bar	1	1.5920	58 HRC
3	02	-	130	Housing	1	1.5920	54 HRC
31	02	-	155	Housing	1	1.5920	54 HRC
	02	-	180	Housing	1	1.5920	54 HRC
	02	-	205	Housing	1	1.5920	54 HRC
	02	-	230	Housing	1	1.5920	54 HRC
	02	-	255	Housing	1	1.5920	54 HRC
3	03	-	-	Piston	1	1.2343	52 HRC
31	04	-	-	Securing Ring	1	1.2379	56 HRC
	05	-	-	Catches	2	1.2379	56 HRC
3	06	-	-	Driver	1	1.2343	52 HRC
31	061	-	-	Driver	1	1.2343	52 HRC
3	07	-	-	Socket set screw M6x8	1	Din 915	
31	08	-	-	Spring	1	1.7103	

Latch Locks - Z4-15

STRACK® NORMALIEN

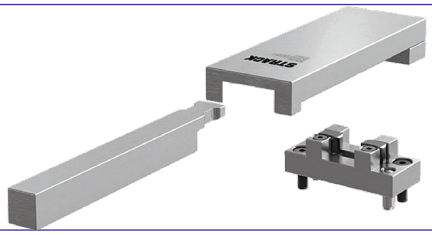

Latch Casing - top tie beam and tension strip pinned

Type	L	Type	L
0-0	0	50-0	50
25-0	25	75-0	75

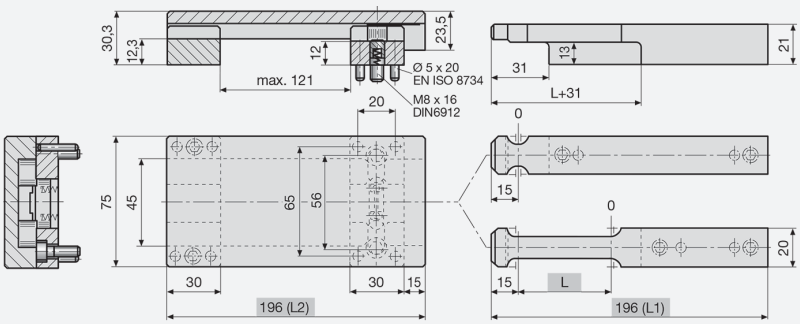

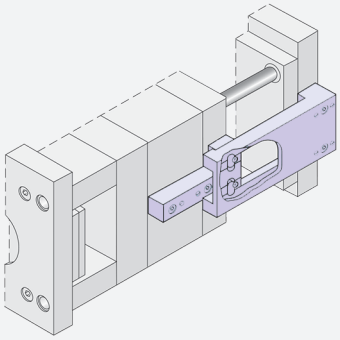

Extended Steady

Type	L	Type	L
0-41	0	50-41	50
25-41	25	75-41	75

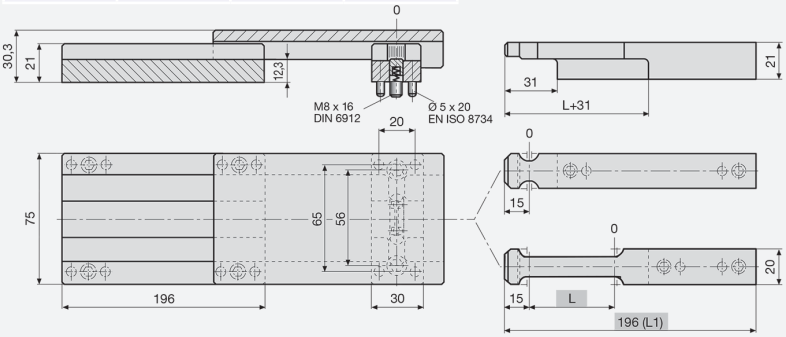

Two Stage Ejector

Type
0-0

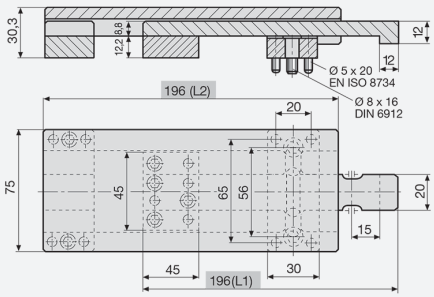

Latch Locks - Z4-17

MOULD ACTIONS

Type	L	Type	L
0-0	0	50-0	50
25-0	25	75-0	75

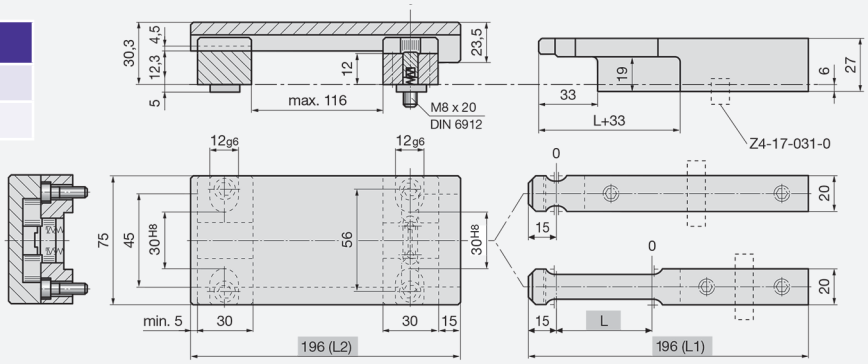

STRACK® NORMALIEN

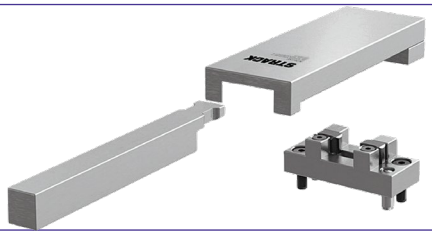

Latch Casing - top tie beam and tension strip pinned

Type	L	Type	L
0-0	0	50-0	50
25-0	25	75-0	75

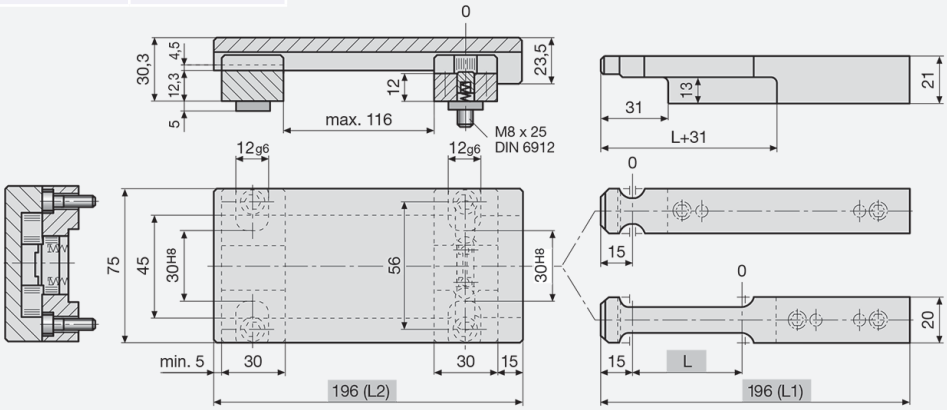

Extended Steady

Type	L	Type	L
0-41	0	50-41	50
25-41	25	75-41	75

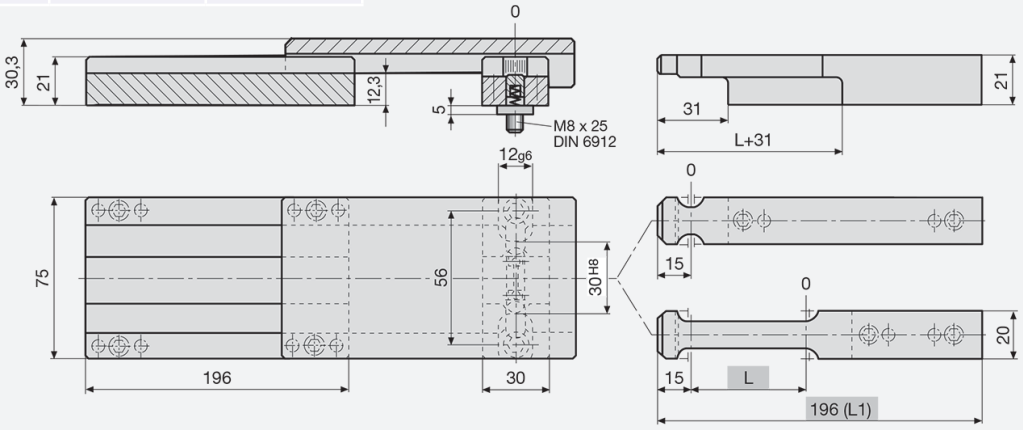

Two Stage Ejector

Type
0-0

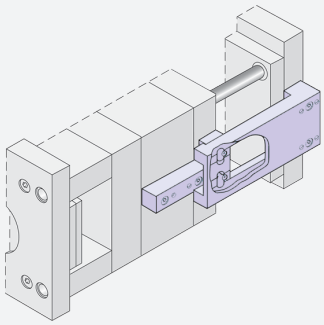

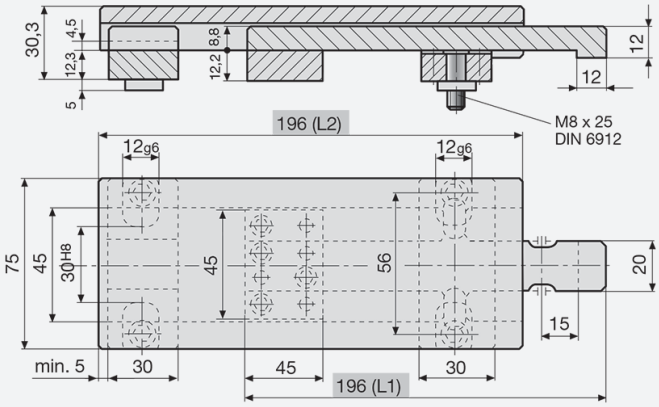

STRACK® NORMALIEN

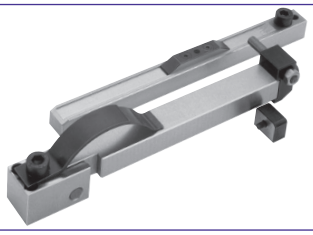

LATCH LOCK Z5-0

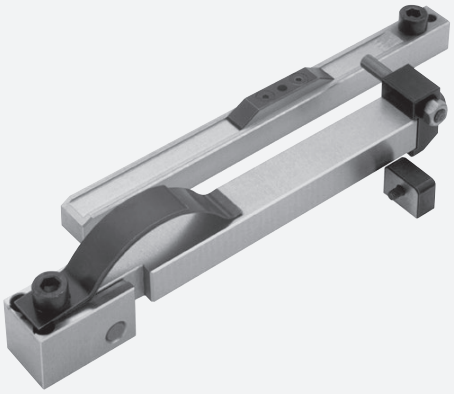

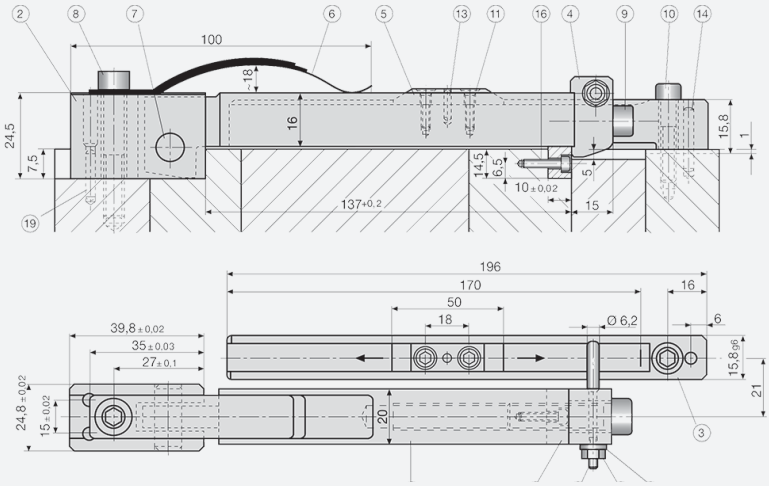

LATCH LOCK Z5-1

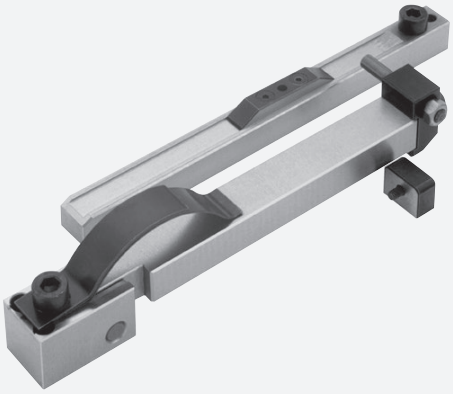

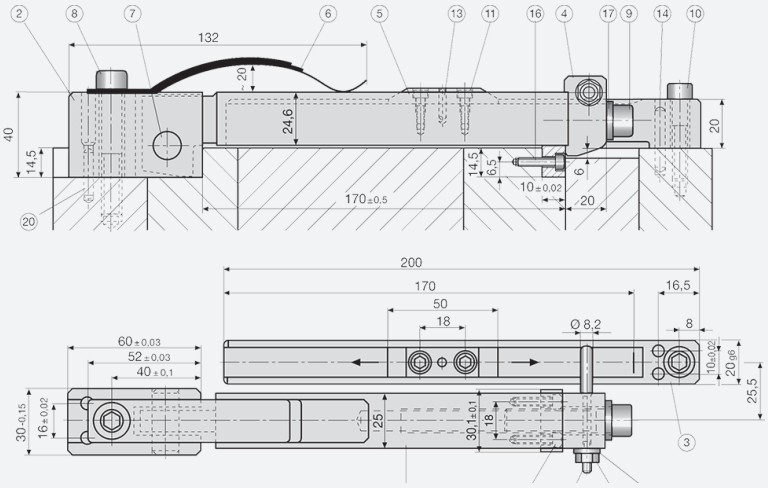

LATCH LOCK Z5-2

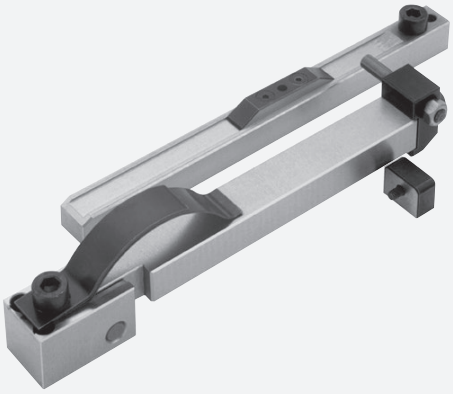

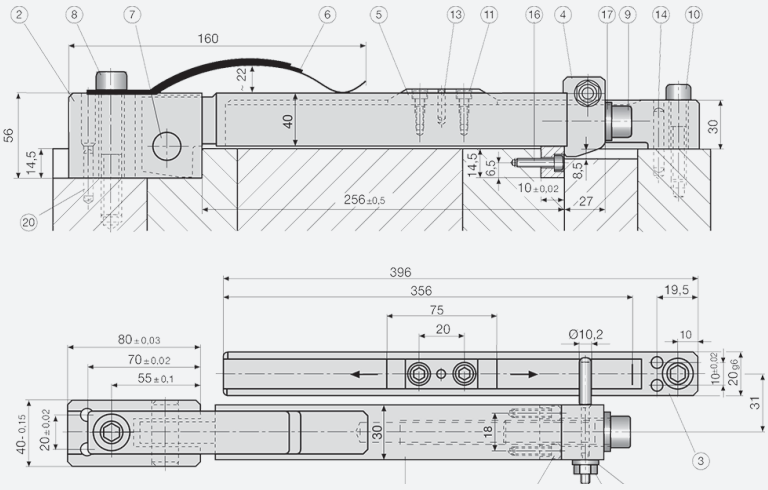

Designed for simplicity and positive plate pulling, the three plate latch system is easily installed.
Mounted externally, the latch and cam plate assembly provides for easy adjustment of plate stroke and positive plate stop positions.
The LS01 and LS02 cam plates are easily adjusted by socket head cap screw, while still in the machine.
Since the latch and the cam plate are separately attached to the mould, there is no possibility of overstroking the machine and causing mould damage.

Available in a range of sizes.

3 Plate Application

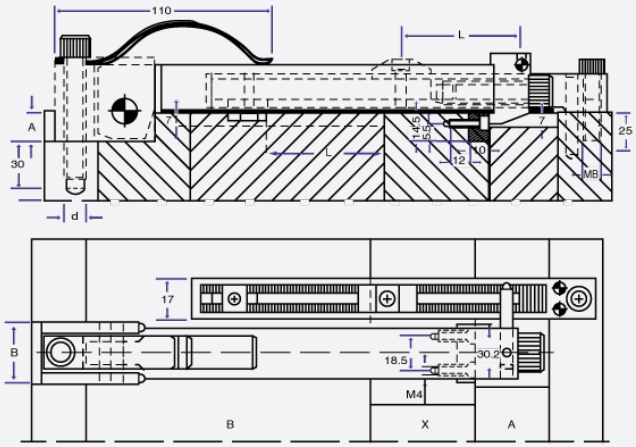

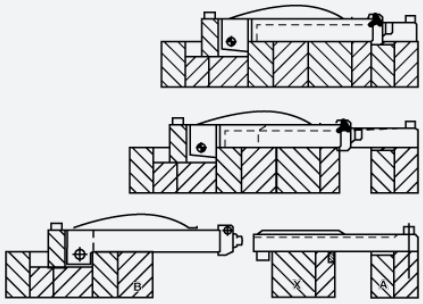

complete release

Product Code	A	B	d
ZH 90/1	3	30	M10
ZH 90/2-3-4	14.5	30	M10
ZH 91	14.5	40	M12

4 Plate Application

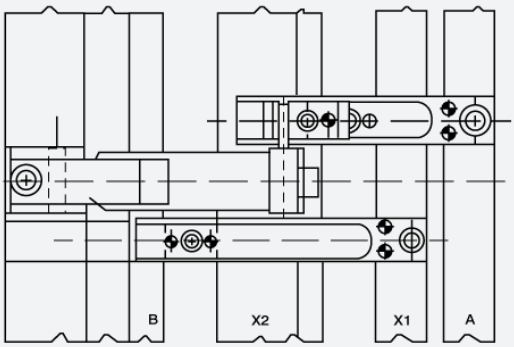

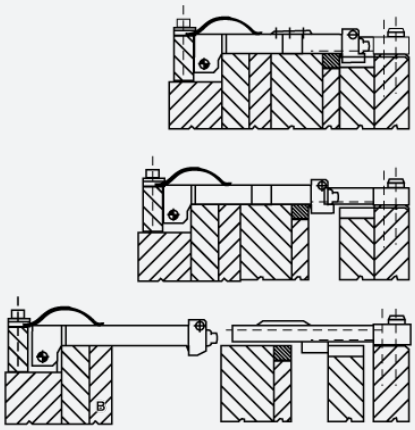

complete release

Latch & Cam Plate
ZH 91

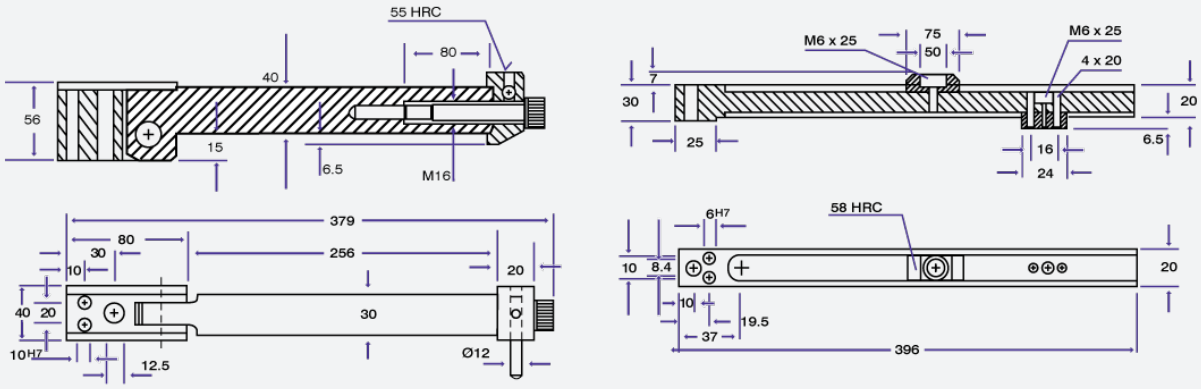

Cam Plate
ZH 90/0..

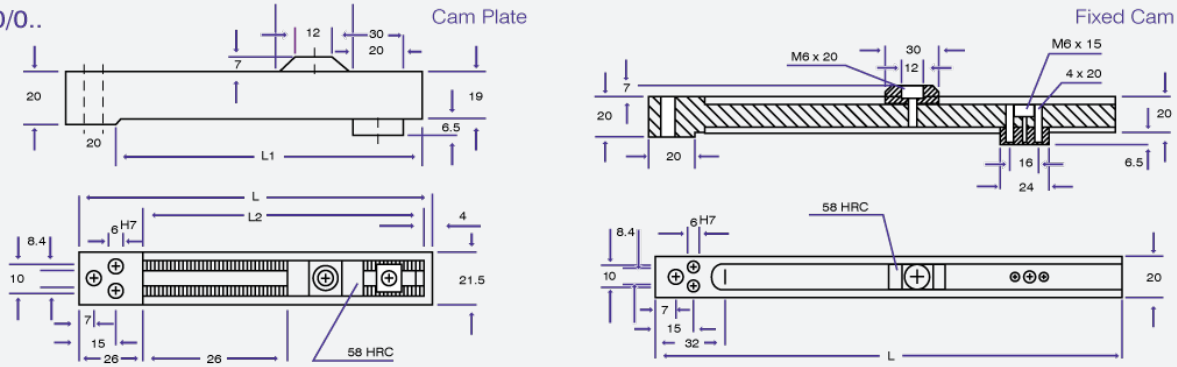

Product Code	L3 max.	L2	L1	L	Type
ZH 90/1	60	110	120	140	A
ZH 90/2	124	170	184	204	A
ZH 90/02SP	124	224	234	254	A

Product Code	Type	L
ZH 90/03	F	200
ZH 90/04	F	250
ZH 90/05	F	300

Latch
ZH 90/..

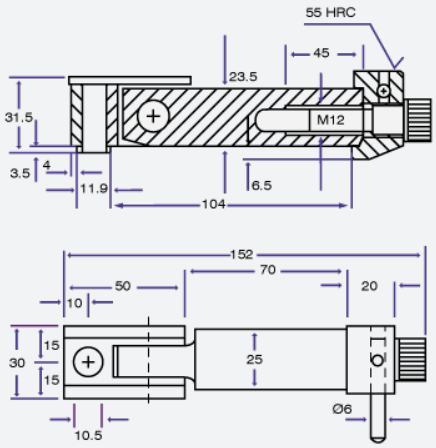

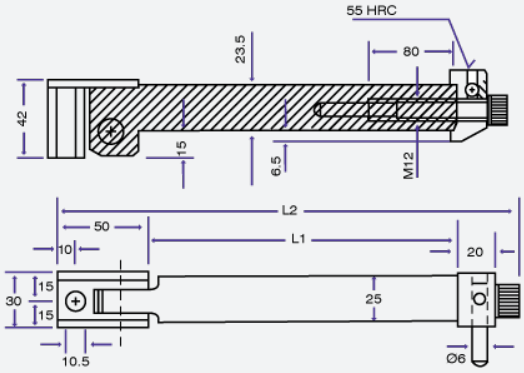

Product Code	Type
ZH 90/01	S

Product Code	L1	L	Type
ZH 90/02SP	90	172	P
ZH 90/2	170	252	P
ZH 90/3	220	302	P
ZH 90/4	270	352	P

STRACK® NORMALIEN

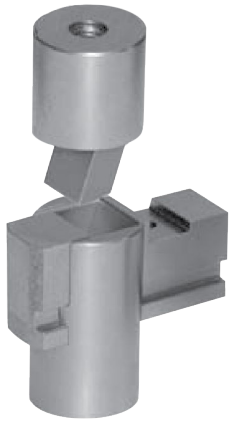

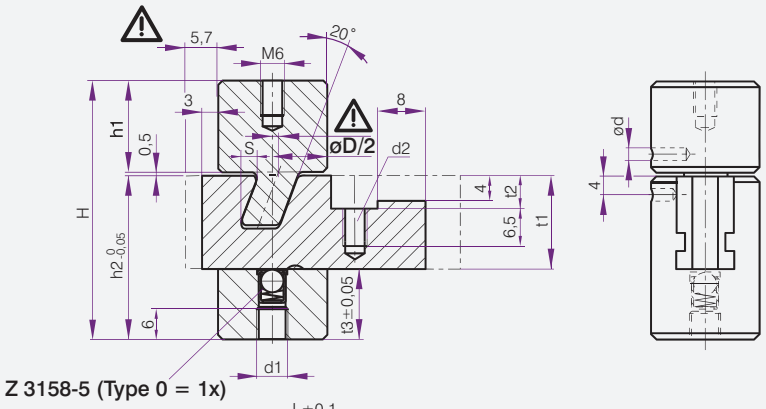

Z 3158-5 (Type 0 = 1x)

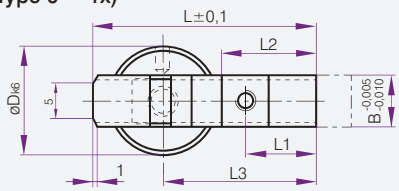

Type 0

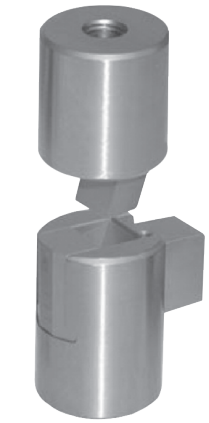

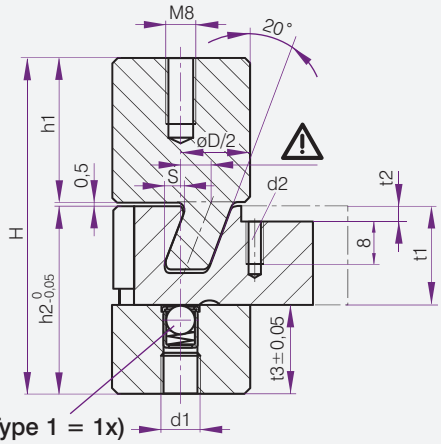

Z 3158-5 (Type 1 = 1x)
Z 3158-5 (Type 2 = 2x)

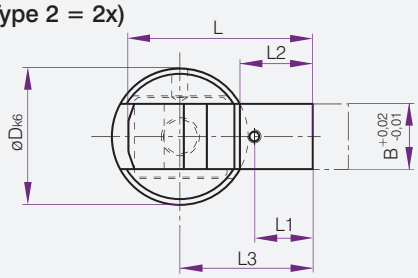

Type 1

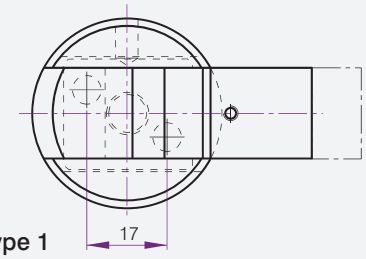

Type 1

Mat.: -Nr. 1.2342/52 HRC

Type	D	B	S	H	h1	h2	t1	t2	t3	L	L1	L2	L3	d	d1	d2
0	16	10	2,7	44,0	15,0	28,5	16	6,0	12,5	36,0	12,0	16,0	25,0	3	M6	M4
1	25	11	3,4	61,5	26,5	34,5	18	2,5	16,5	32,8	10,8	13,9	24,2	3	M6	M3
2	40	22	6,4	60,5	20,0	40,0	28	8,0	12,0	50,0	8,0	20,0	37,0	4	M8	M5

Square Guide Bar - Z46

STRACK NORMALIEN

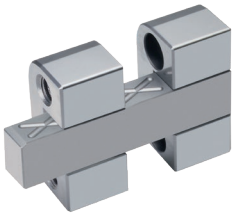

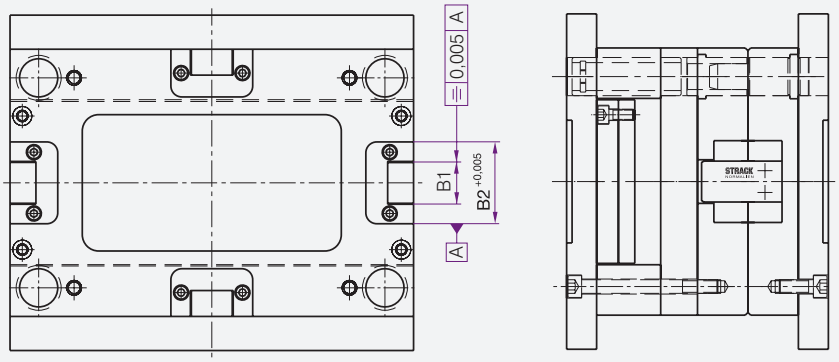

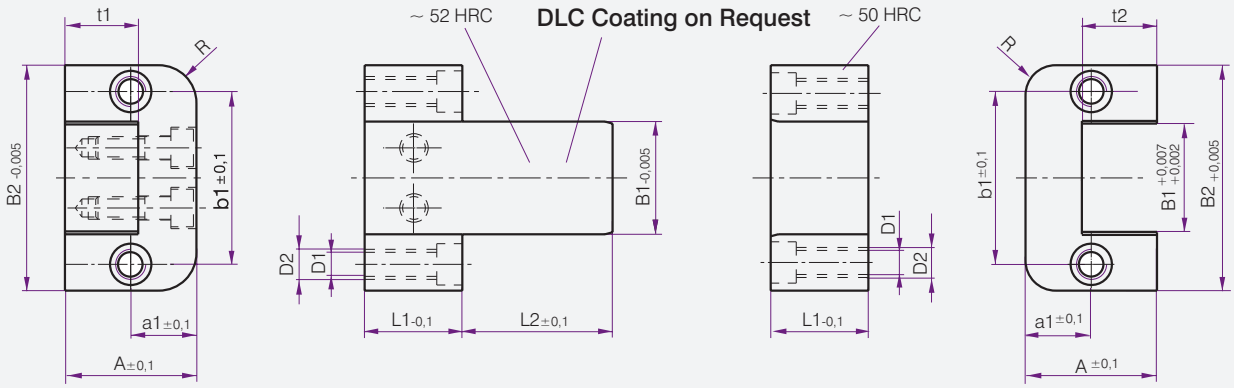

B1	L1	L2	A	B2	D1	D2	a1	b1	t1	t2	R
16	20	20	22	45	6,8	M8	11	30	11,5	12	8
	20	40	22	45	6,8	M8	11	30	11,5	12	8
30	26	40	35	60	6,8	M8	17,5	46	19,5	20	10
	26	63	35	60	6,8	M8	17,5	46	19,5	20	10
48	36	32	46	100	10,3	M12	23	74	25,5	26	12,5
	36	50	46	100	10,3	M12	23	74	25,5	26	12,5
	36	63	46	100	10,3	M12	23	74	25,5	26	12,5
	36	80	46	100	10,3	M12	23	74	25,5	26	12,5
77	56	50	60	150	14	M16	30	114	35,5	36	16
	56	71	60	150	14	M16	30	114	35,5	36	16
	56	100	60	150	14	M16	30	114	35,5	36	16

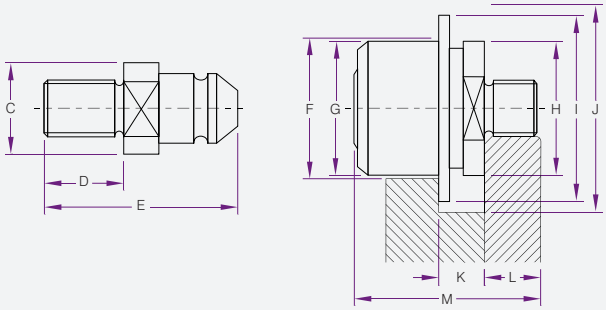

Mould Closed Material Injected

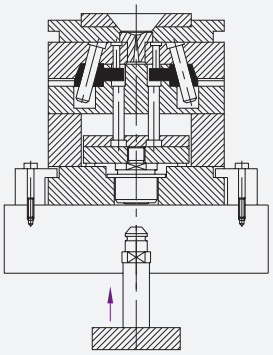

Mould Open-Coupler Engages & Pushes Forward

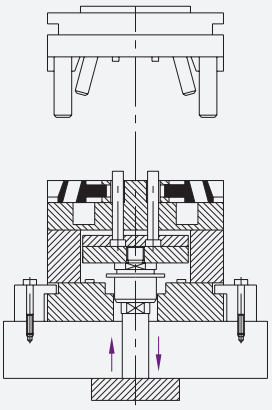

Coupler and Bars Pull Back the Ejector Plate

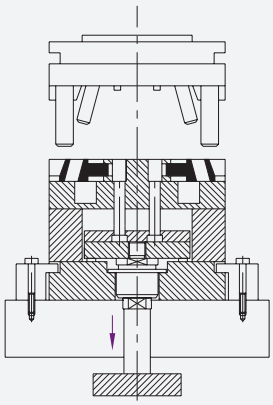

Coupler									
Product Code	**Thread**	**F**	**G**	**H**	**I**	**J**	**K**	**L**	**M**
302M12COUP	12x1.75	34	32	32	39	43	9	15	42.5
402M16COUP	16x1.5	40	38	38	48	53	13	15	52
402M162COUP	16x2	40	38	38	48	53	13	15	52
402M20COUP	20x1.5	40	38	38	48	53	13	15	52
412M16COUP	16x1.5	58	56	52	65	70	17	18	68

Barbs				
Product Code	**Thread**	**C**	**D**	**E**
301M12BARB	12x1.75	22.8	20	45.5
401M16BARB	16x2	25.8	20	55
401M20BARB	20x2.5	25.8	20	55
411M16BARB	16x2	35	35	68

V250CE Compact Block Hydraulic Cylinder

The V250CE cylinders have been specially designed for being extremely compact and for applying the integrated end stroke magnetic switches. Furthermore their construction permits a high standardization with consequent lower price and immediate delivery time. Available bores: from 25 to 100 mm. Strokes 20, 50 and 80 mm. Depending on the bore. These cylinders are ideal for short stroke slides and cores on plastic injection moulds. The use for heavy duties is not recommended.

Technical Features:
Max. working pressure: up to 250 bar (3625 PSI)
Bore Size: 25 to 100 mm
Rod Size: 18 to 45 mm
Max. working temperature :
Magnetic version: 80°C - 176°F
Non-Magnetic version: 100°C - 212°F
Stroke : 20, 50 and 80 mm (according to the bore size)

V215CR Tie Rod Hydraulic Cylinder

The cylinders of V215CR range are built according to ISO 6020/2 Compact Norms and they are changeable with other similar cylinders (with reserve; personally verify all dimensions). This model permits a wide range of applications with the best compromise between quality and price where not particular requirements about pressure, temperature, dimensions are requested. Till bore 160 magnetic switches can be applied (with a proper version).

Technical Features:
Max. working pressure: up to 215 bar (3117 PSI)
Bore Size: 25 to 200 mm
Rod Size: 12 to 140 mm
Max. working temperature :
Magnetic version: 80°C - 176°F
Non-Magnetic version: 120°C - 248°F
Stroke: 20 and 1500 mm (according to the bore size)

V260CF Self-Locking Rod Hydraulic Cylinder

The V260CF are double-acting hydraulic cylinders with a mechanical locking system of the rod in the end stroke position (extended rod), which permits to contrast very high opposite thrusts. Such a solution is widely applicable in the field of plastic injection and die-casting moulds, in order to stand the injection pressure on large moulding surfaces. The rod is hydraulically unlocked automatically when the piston comes back. WARNING: For a correct functioning the cylinder it's necessary to complete all the times the total available cylinder stroke, both forward and backward, in order to assuring the locking on one side and to avoid hammer-effects on piston-rod screw on the other side. For a firm locking it is necessary to keep the oil in pressure, when pushing, at a minimum of 120 bar-1740 PSI.- Pay great attention to the traction force, which is considerably lower than the thrust.

Technical Features:
Max. working pressure: up to 260 bar (3770 PSI)
Bore Size: 30 to 84 mm
Rod Size: 20 to 60 mm
Stroke: 30 and 150 mm (according to the bore size)
Max. working temperature :
Magnetic version: 80°C - 176°F
Non-Magnetic version: 160°C - 320°F

Head to the Vega website for more options